EXPERIMENT-4.1

Implementation of half subtractor by using basic gates

OBJECTIVE:

1-To Design a half subtractor circuit using logic gates

2- To verify the truth table of Half subtractor circuit

THEORY:

The half-subtractor is a combinational circuit which is used to perform subtraction of two bits. It has two inputs, A (minuend) and B (subtrahend) and two outputs Difference (A XOR B) and Borrow (A'B). Implementation of Half Subtractor can be achieved by using basic gates.

BlOCK DIAGRAM

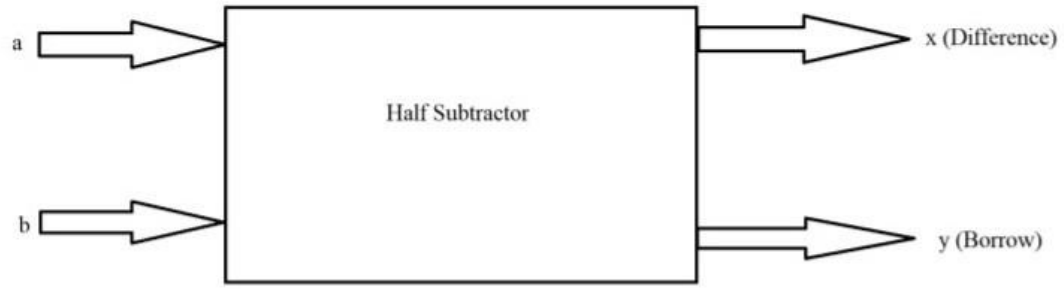

Name- Pratyush Kumar Singh Sec- A Roll no- 23 Stream-CSE(IOT)

CIRCUIT DIAGRAM:

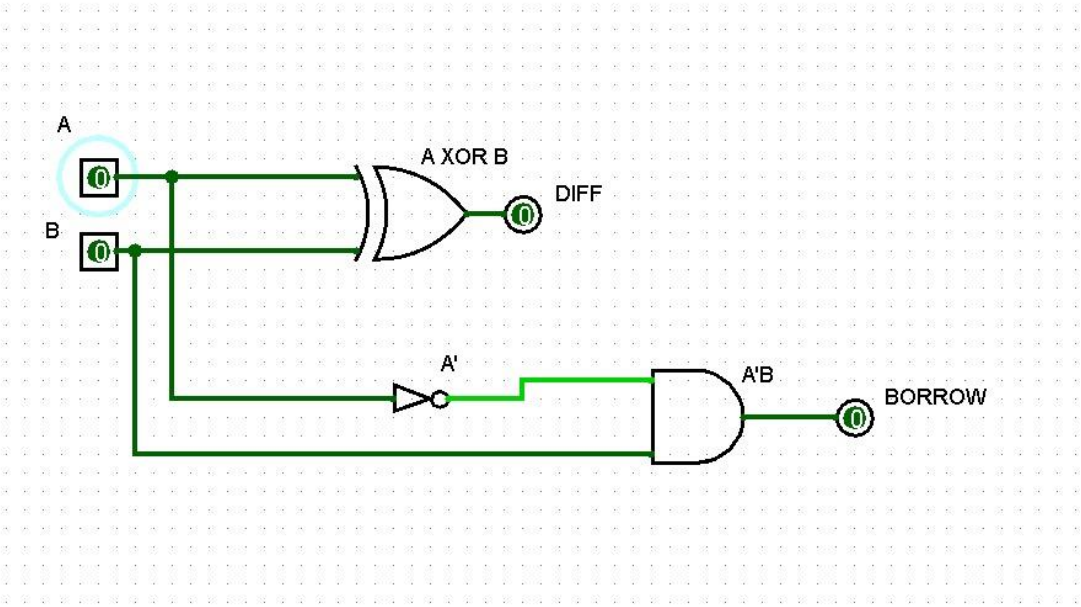

TRUTH TABLE

TRUTH TABLE

A	B	DIFF	Borrow
0	0	0	0
0	1	0	1
1	0	1	0
1	1	0	0

Logical Expresion

For Difference, Diff = (A XOR B)

$= (A'.B + A.B')$

For Carry, y = $(A'.B)$

CONCLUSION:

From this experiment, we have learnt about Subtractor circuits, which take two binary numbers as input and subtract one binary number input from the other binary number input. Similar to adders, it gives out two outputs, difference and borrow (carry-in the case of Adder). The half-subtractor is a combinational circuit which is used to perform subtraction of two bits. It has two inputs, A (minuend) and B (subtrahend) and two outputs Difference and Borrow. It has been constructed using basic logic gates in this experiment.